INTERNATIONAL BEARING SERVICES

Thermoplastische Bearing Units

Onze kunststof lagerhuizen serie zijn zeer succesvolle en populaire producten in de voedings-, farmaceutische en chemische industrie. Belangrijkste eigenschappen: corrosie beschermd, hoge sterkte, lage wrijving, slijtage, schokken en chemische bestendigheid.

Thermoplastische behuizingen

De lagerhuizen zijn gemaakt van hoogwaardig, met glasvezel versterkte thermoplastische polyester en ze zijn volledig uitwisselbaar met conventionele gietijzeren behuizing. Deze onderhoudsvrije behuizingen hebben een uitstekende mechanische sterkte en stijfheid maar ze zullen nooit last hebben van corrosie. Waar hoge normen van hygiëne belangrijk zijn, zoals in de voedings- en farmaceutische industrie, zijn hun gladde oppervlakken veel hygiënischer dan die van gietstaal, waarin de ruwe oppervlakken veel vuil, schimmels of bacteriën kunnen herbergen.

Vergelijking met conventionele behuizingen

Een gecoat of verzinkt gietijzeren behuizing kan makkelijk worden beschadigd. Tijdens de installatie kan de afwerking rond de randen van de bouten beschadigen. Deze behuizingen zijn gemaakt van massief PBT hierdoor is er geen beschermende coating nodig. Een ander voordeel is dat wanneer een deel van de behuizing is beschadigd, het materiaal niet gevoelig is voor corrosie.

Gebruikt in vele industrieën

Vanwege hun corrosiebestendigheid en niet-magnetische eigenschappen worden onze behuizingen gebruikt in diverse industrieën, zoals de: voedselverwerking, handling, farmaceutische en chemische verwerking en in veel algemene industriële toepassingen.

Duurzaamheid

U kunt er volledig op vertrouwen dat de behuizingen de zwaarste toepassingen kunnen doorstaan. Ze kunnen simpel worden schoongespoten met heet water zelfs bij temperaturen tot 102°C. De smeernippel en bussen in de boutgaten zijn gemaakt van RVS 304.

Thermoplastic Bearing Units

Our thermoplastic housing series are very successful and popular products in the food, pharmaceutical and chemical industry. Main properties: corrosion protected, high strength, low friction, wear, shock and high chemical resistant.

Thermoplastic housings

The bearing housings are made of high-grade, fiberglass-strengthened thermoplastic polyester and they are completely interchangeable with conventional cast iron housings. These maintenance-free housings have excellent mechanical strength and stiffness yet they will never suffer from corrosion.

Where high standards of hygiene are important, such as in the food and pharmaceutical industries, their smooth surfaces are much more hygienic than those of cast iron housings, whose rough surfaces can harbor objectionable dirt, mold or bacteria.

Comparison with conventional housings

Coated or plated cast iron housings can scratch, chip and peel. In fact, the very act of installing them causes the finish to be removed around the edges of the bolts. These housings are made of solid PBT, therefore no protective coating is required. Another advantage is that when a part of the housing is damaged, the PBT material is not vulnerable to corrosion.

Used in many industries

Because of their corrosion-resistant and non-magnetic properties, our housings are used in a wide variety of industries, including: food processing, canning, bottling, pharmaceutical, chemical processing and in many general industrial applications.

Durability

You can be completely confident that the housings will endure the toughest applications. The housings can be cleaned or hosed down with hot water, and will operate at temperatures up to 102°C. The grease nipple and the bushes in the bolt-holes are made of stainless steel material.

Properties of PBT (Poly Butylece Terephthalate)

Properties	Unit	Test method	Value
Mechanical			
Tensile strength:			
• At yield	N/mm^2	ASTM D 638	115
• At break	N/mm^2	ASTM D 638	-
Elongation:			
• At yield	%	ASTM D 638	3
• At break	%	ASTM D 638	
Tensile modulus	N/mm^2	ASTM D 638	8000
Flexural Yield (dubbel? Of BREAK)	N/mm^2	ASTM D 790	-
Flexural Yield Strength	N/mm^2	ASTM D 790	170
Flexural modulus	N/mm^2	ASTM D 790	7000
Notched impact strength Charpy	K/m^2	DIN 53453	12
Notched impact strength IZOD	J/m	ASTM D 256	
Hardness:			
• H358/10	N/mm^2	DIN 53456	104
• H358/60	N/mm^2	DIN 53456	101
• Rockwell	-	ASTM D 785	L102
Thermal			
Oxygen index”	%	ASTM D 2863	19
Flame retareancy” (1/6mm thickness)	-	UL stand 94	94HB
Heat resistance: Vicat, method B	°C	ASTM D 1525	210-215
Thermal conductivity	W/m^2C	ASTM C177	0.19
Mould shrinkage flow	%	ASTM D 1299	0.4-0.6
Cross flow direction	%	ASTM D 1299	0.6-0.8
Physical			
Water absorption, 24 Hrs, 23°C	%	ASTM D 570	0.06

Chemical Resistance of PBT

Chemical media	°C	Immulsion % Days	% Retention of strength
Acids			
10% Hydrochloric	23 23 23	30 90 180	89 85 82
10% Sulfuric	23 23 23	30 90 180	97 94 90
36% Sulfuric (Battery)	23 23 66 66	30 180 30 180	97 96 84 35
10% Acetic	23 23	30 180	89 88
Bases			
5% Potassium Hydroxide	23 23	30 90	83 10
10% Sodium Hydroxide	23 23	30 180	2 -
10% Ammonium Hydroxide	23 23 23	30 90 180	90 87 58
Organic Solvents			
Ethyl Alcohol	23 23	30 180	99 94
Methyl Alcohol	23 23	30 180	91 76
Isopropyl-Alcohol	23 23	30 180	100 100
Isopropyl-Alcohol & Water (50:50)	23 23	30 180	93 96
Turpentine	23 23	30 180	66 92
Acetone	23 23	30 180	63 90

CTL2.. Series

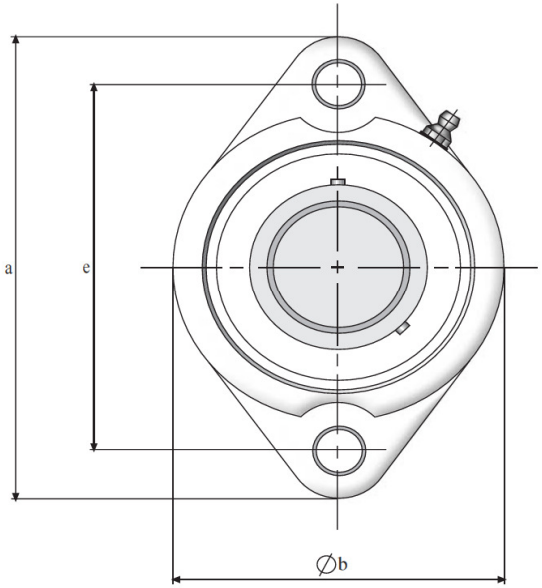

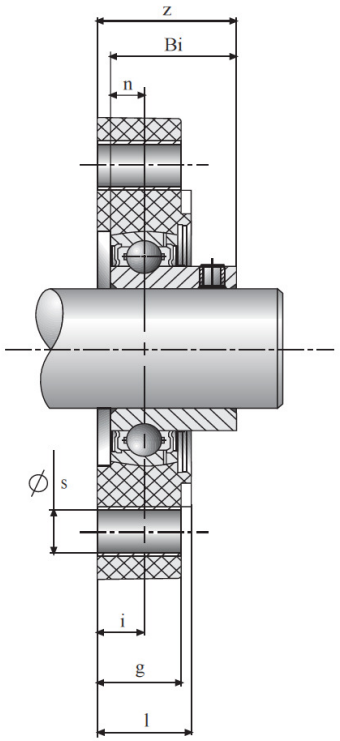

Housing	mm	a	e	b	g	l	s	z	Bi	n	i	Kg	Bolt D	Nm	Bearing
CTL204	20	90.5	71.4	66.5	18.4	20	9	27	24.7	7	9.5	0.17	M8	15	SUC204
CTL205	25	97	76.2	71	18.4	21.2	9	29.5	27	7.5	10.0	0.22	M8	15	SUC205
CTL206	30	112.5	90.5	84	20.5	23.3	11	33.5	30.3	8	11.5	0.34	M10	20	SUC206
CTL207	35	126	100	94	22.5	25.3	11	36.5	32.9	8.5	12.5	0.49	M10	25	SUC207
CTL208	40	150	119	100	24	26.8	14	39.5	35.5	9	13.5	0.62	M12	30	SUC208

TFL2.. Series

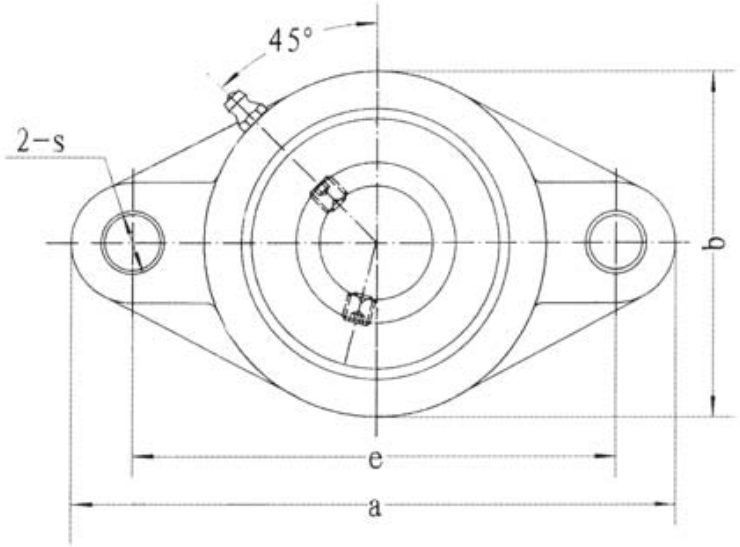

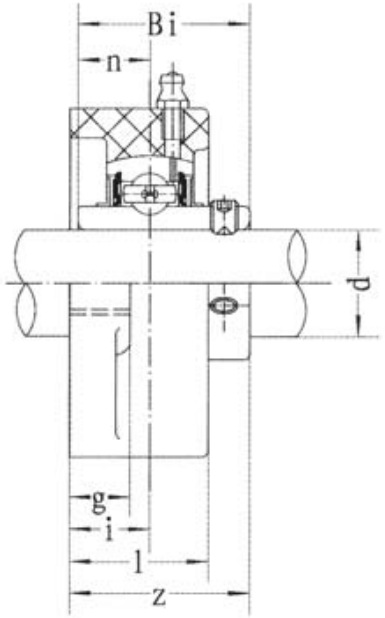

Housing	mm	a	e	b	g	l	s	Z	i	Bi	n	Kg	Bolt D	Nm	Bearing
TFL204	20	130	90	70	11.4	26.5	11	33.7	15.4	31	127	0.24	M10	18	SUC204
TFL205	25	131	99	69.5	13.5	29.1	11	36.7	17	34.1	14.3	0.3	M10	25	SUC205
TFL206	30	148	117	80	13.3	30.5	11	41.2	19	38.1	15.9	0.45	M10	30	SUC206
TFL207	35	164	130	90	16.1	32.8	13	43.4	18	42.9	17.5	0.66	M12	35	SUC207
TFL208	40	176	144	100	20	37.5	14	51.7	21.5	49.2	19	0.87	M12	40	SUC208
TFL209	45	188.5	148.5	108	21	41	17	54.2	24	49.2	19	1	M16	45	SUC209
TFL210	50	197	157	115	21	43	17	57.6	25	51.6	19	1.2	M16	50	SUC210
TFL211	55	224	184	130	18	43	19	58.4	25	55.6	22.2	1.42	M16	55	SUC211
TFL212	60	250	202	140	18	48	23	88.7	29	65.1	25.4	1.6	M16	60	SUC212

TP2.. Series

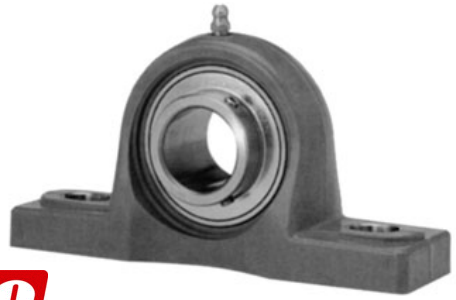

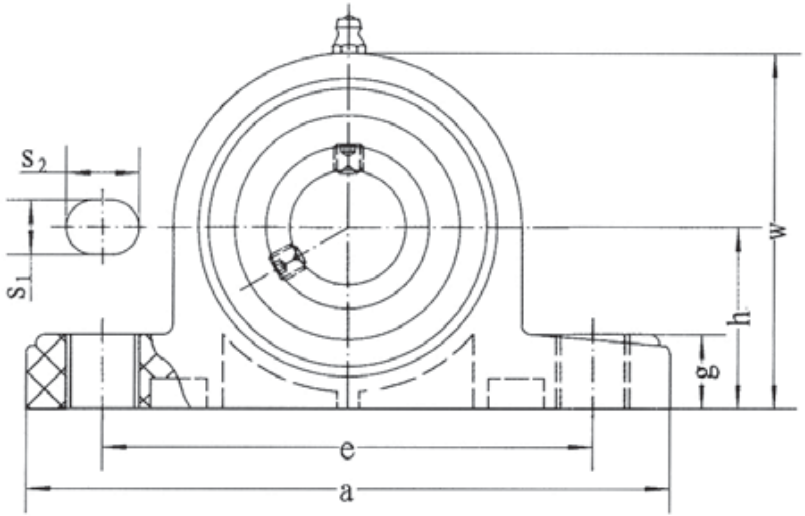

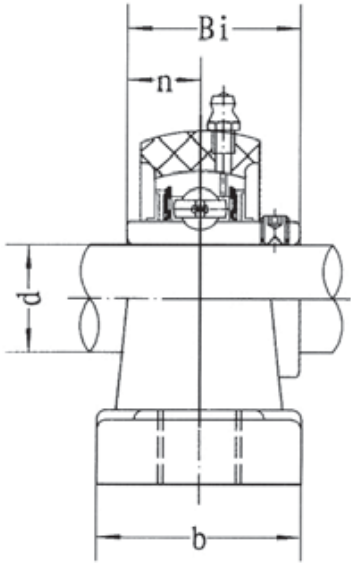

Housing	mm	h	a	e	b	S1	S2	g	w	Bi	n	Kg	Bolt D	Nm	Bearing
TP204	20	33.3	127	95	38	11	14	14.2	65.5	31	12 .7	0.29	M10	18	SUC204
TP205	25	36.5	140.5	105	38	11	14	14.5	71	34	14.3	0.34	M10	25	SUC205
TP206	30	42.9	163	119	46	14	18	17.8	84	38.1	15.9	0.54	M10	30	SUC206
TP207	35	47.6	168	127	48	14	18	18	94.5	42.9	17.5	0.78	M12	35	SUC207
TP208	40	49.2	184	137	54	14	18	19.5	99	49.2	19	0.97	M12	45	SUC208
TP209	45	54	192	146	54	17	20	23	106	49.2	19	1.09	M16	50	SUC209
TP210	50	57.2	206	159	60	17	20	23	114	51.6	19	1.2	M16	55	SUC210
TP211	55	63.5	219	171	60	20	23	23	125	55.6	22.2	1.38	M16	60	SUC211
TP212	60	69.8	241	184	70	20	23	25	138	65.1	25.4	1.52	M16	65	SUC212

TF2.. Series

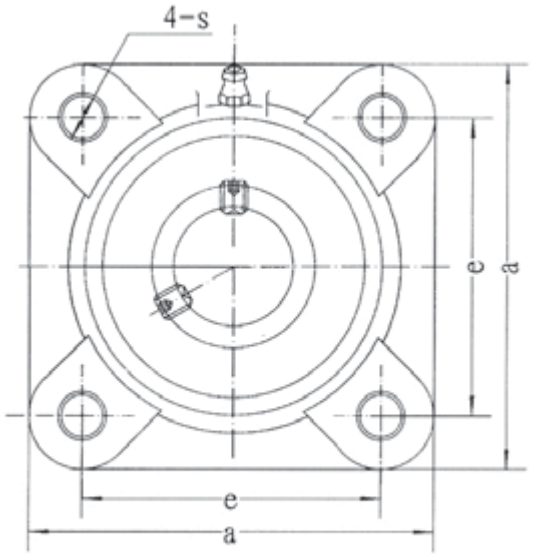

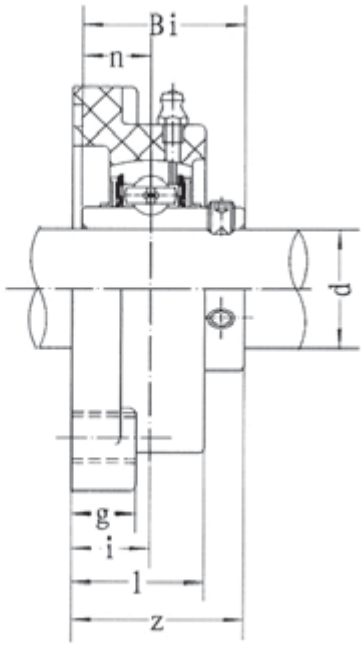

Housing	mm	a	e	g	l	s	Z	i	Bi	n	Kg	Bolt D	Nm	Bearing
TF204	20	86	63.5	13.4	27.8	11	36.3	18	31	12.7	0.29	M10	18	SUC204
TF205	25	95	70	14.3	28	11	36.7	17	34.1	14.3	0.36	M10	25	SUC205
TF206	30	107	83	14.3	31.5	11	41.4	19.2	38.1	15.9	0.5	M10	30	SUC206
TF207	35	118	92	15.5	34.8	13	46.9	21.5	42.9	17.5	0.74	M12	35	SUC207
TF208	40	130	102	17	37.5	14	53.2	23	49.2	19	0.97	M12	40	SUC208
TF209	45	137	105	19	41	17	54.2	24	49.2	19	1.1	M16	45	SUC209
TF210	50	143	111	21	43	17	57.6	25	51.6	19	1.25	M16	50	SUC210
TF211	55	162	130	20	43	19	58.4	25	55.6	22.2	1.4	M16	55	SUC211
TF212	60	175	143	20	48	19	68.7	29	65.1	25.4	1.6	M16	60	SUC212

TBL2.. Series

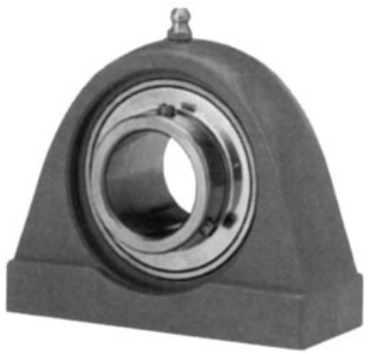

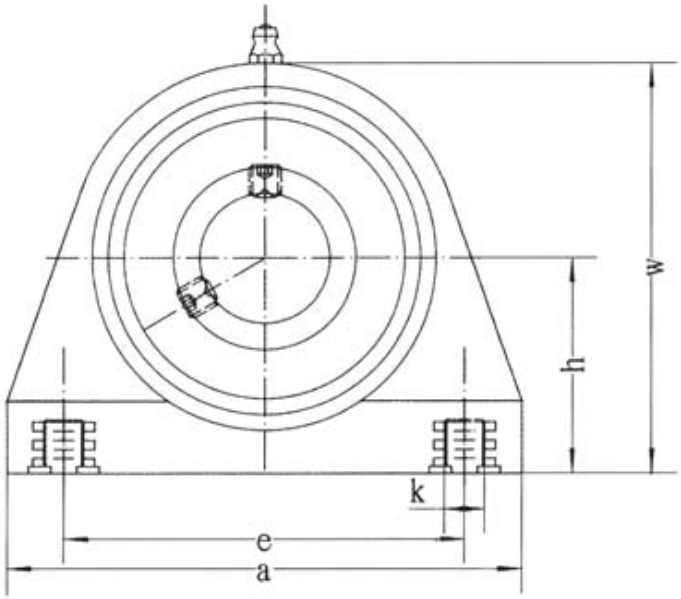

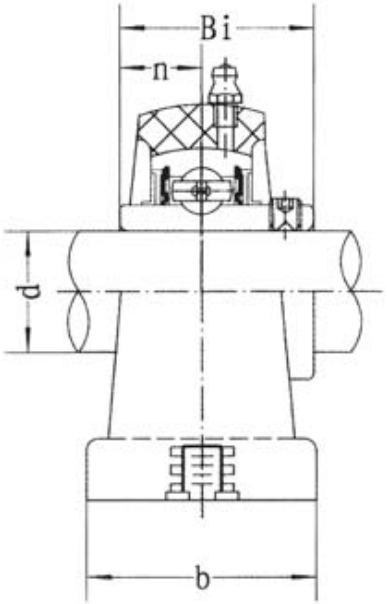

Housing	mm	a	e	b	h	w	k	Bi	n	Kg	Bolt D	Nm	Bearing
TBL204	20	72.8	50.8	34.5	33.3	66	M8	31	12.7	0.35	M8	18	SUC204
TBL205	25	76.2	50.8	39.5	36.5	73.5	M10	34.1	14.3	0.4	M10	25	SUC205
TBL206	30	101	76.2	42.5	42.9	84	M10	38.1	15.9	0.55	M10	30	SUC206
TBL207	35	110	82.6	47.5	47.6	95	M10	42.9	17.5	0.8	M10	35	SUC207
TBL208	40	120	88.9	48	49.2	100.5	M12	49.2	19	0.95	M12	45	SUC208
TBL209	45	124	95.3	50	54	108.5	M12	49.2	19	1.1	M12	50	SUC209
TBL210	50	135	101.6	54	57.2	115	M16	51.6	19	1.25	M16	55	SUC210
TBL211	55	140	104	66	63.5	125	M20	55.6	22.2	1.43	M20	60	SUC211
TBL212	60	150	114	68	69.9	138	M20	65.1	25.4	1.58	M20	65	SUC212

TPA2.. Series

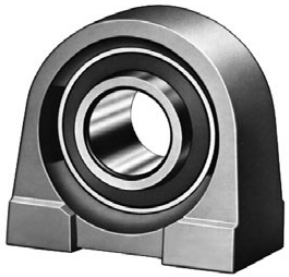

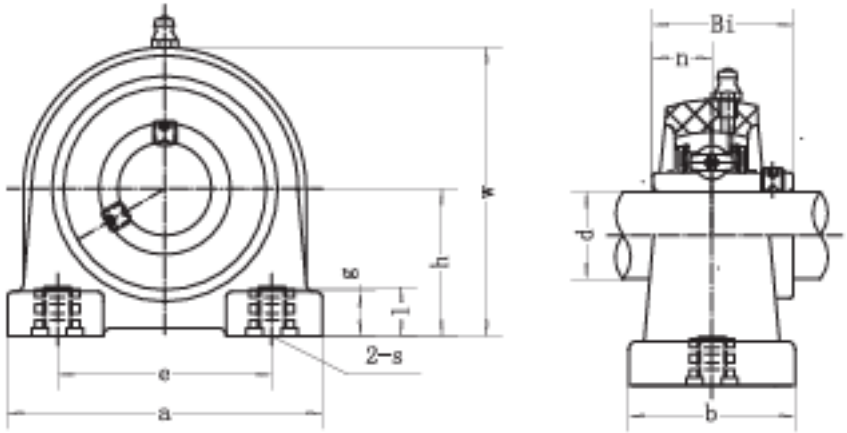

Housing	mm	h	a	e	b	s	g	l	w	Bi	n	Kg	Bolt D	Nm	Bearing
TPA204	20	30.2	76	52	40	M8	15	11	62	31	12.7	0.55	M8	18	SUC204
TPA205	25	36.5	84	56	38	M10	15	12	72	34.1	14.3	0.61	M10	25	SUC205
TPA206	30	42.9	94	66	50	M10	18	12	84	38.1	15.9	0.89	M10	30	SUC206
TPA207	35	47.6	110	80	55	M10	20	13	95	42.9	17.5	1.31	M10	35	SUC207
TPA208	40	49.2	116	84	58	M12	20	13	100	49.2	19	1.56	M12	40	SUC208
TPA209	45	54.2	120	90	60	M12	25	13	108	49.2	19	1.7	M12	45	SUC209
TPA210	50	57.2	130	94	64	M16	25	14	116	51.6	19	1.93	M16	50	SUC210
TPA211	55	63.5	140	104	66	M16	25	14	125	55.6	22.2	2.33	M16	55	SUC211
TPA212	60	69.9	150	114	68	M16	25	15	138	65.1	25.4	2.9	M16	60	SUC212

TPL2.. Groove Series

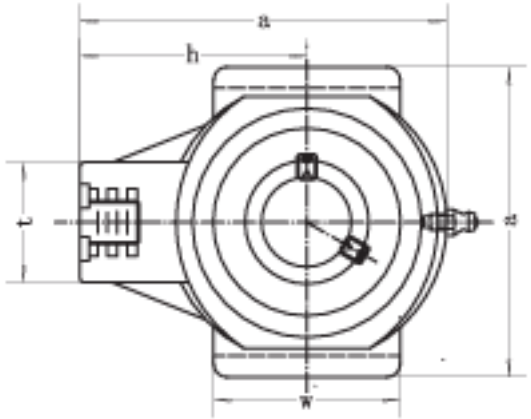

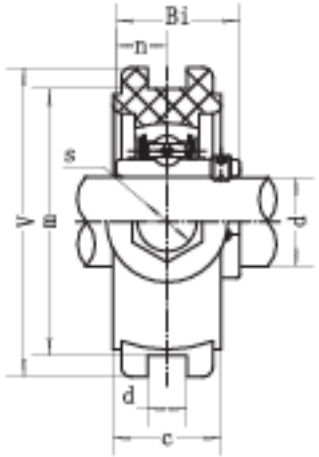

Housing	mm	a	c	d	h	m	s	t	v	w	Bi	Kg	n	Bearing
TPL204	20	99	27.5	12	64	76	M16	36	88	47	31	12.7	0.35	SUC204
TPL205	25	99	27.5	12	64	76	M16	36	88	47	34.1	14.3	0.4	SUC205
TPL206	30	125	34.5	12	76	89	M16	40	102	63	38.1	15.9	0.55	SUC206
TPL207	35	125	34.5	12	76	89	M16	40	102	63	42.9	17.5	0.8	SUC207
TPL208	40	140	34.5	16	85	102	M16	40	114	80	49.2	19	0.95	SUC208
TPL209	45	149	40	16	90	102	M20	50	117	85	49.2	19	1.1	SUC209
TPL210	50	149	40	16	90	102	M20	50	117	85	51.6	19	1.25	SUC210
TPL211	55	171	38	22	106	130	M20	64	146	95	55.6	22.2	1.62	SUC211
TPL212	60	194	42	22	119	130	M20	64	146	102	65.1	25.4	1.78	SUC212

HPL2.. Series

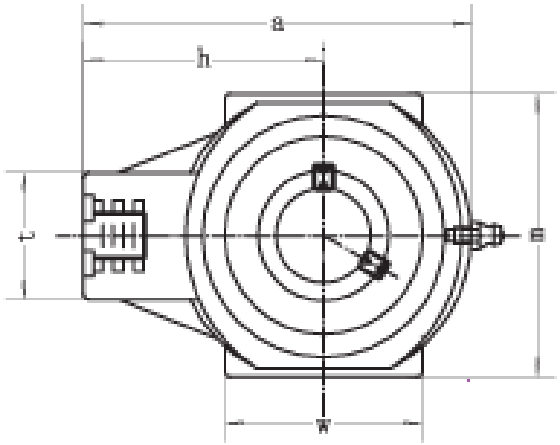

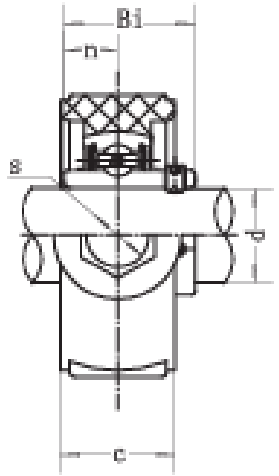

Housing	mm	a	c	h	m	s	t	w	Bi	Kg		Bearing
HPL204	20	99	27.5	63.5	65	M16	36	47	31	12.7	0.35	SUC204
HPL205	25	99	27.5	63.5	74	M16	36	47	34.1	14.3	0.4	SUC205
HPL206	30	125	34.5	76	90	M16	40	63	38.1	15.9	0.55	SUC206
HPL207	35	125	34.5	76	90	M16	40	63	42.9	17.5	0.8	SUC207
HPL208	40	140	34.5	85	100	M16	40	80	49.2	19	0.9	SUC208
HPL209	45	149	40	90	110	M20	50	85	49.2	19	1.1	SUC209
HPL210	50	149	40	90	110	M20	50	85	57.6	19	1.2	SUC210
HPL211	55	171	38	106	140	M20	64	95	55.6	22.2	1.4	SUC211
HPL212	60	194	42	119	140	M20	64	102	65.1	25.4	1.52	SUC212

TFB2.. Series

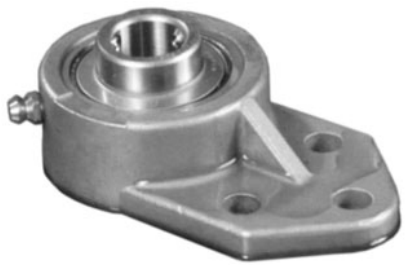

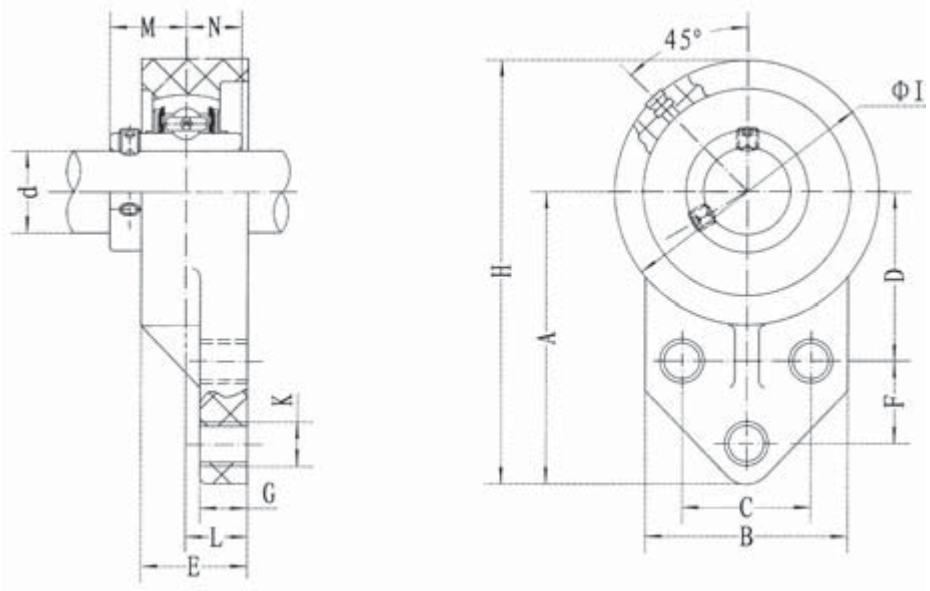

Housing	mm	B	C	D	E	F	G	H	I	k	M	N	Kg	Bolt D	Nm	Bearing
TFB204	20	62	38.1	42.9	26.5	22.2	11.4	108	63.5	10.7	18.3	12.7	0.5	M10	18	SUC204
TFB205	25	63.5	41.3	46	34	28.6	11.4	120.6	70	10.7	19.8	14.3	0.3	M10	25	SUC205
TFB206	30	76	47.6	52.4	32	31.8	13.3	138.5	83	10.7	22.2	15.9	0.46	M10	30	SUC206
TFB207	35	89	50.8	60.3	36.5	31.8	16.1	157	95	13.1	25.4	17.5	0.66	M12	35	SUC207
TFB208	40	78	50	60	36	41	16	164	100	13.1	30.2	19	0.78	M12	40	SUC208
TFB209	45	80	54	65	38	43	18	174	106	13.1	30.2	19	0.92	M12	45	SUC209
TFB210	50	86	58	68	40	46	18	184	112	13.1	32.6	19	1.12	M12	50	SUC210
TFB211	55	90	62	78	43	50	18	207	130	16	33.4	22.2	1.47	M14	55	SUC211
TFB212	60	94	66	84	48	55	18	223	140	16	39.7	25.4	1.63	M14	60	SUC212

TFC2.. Series

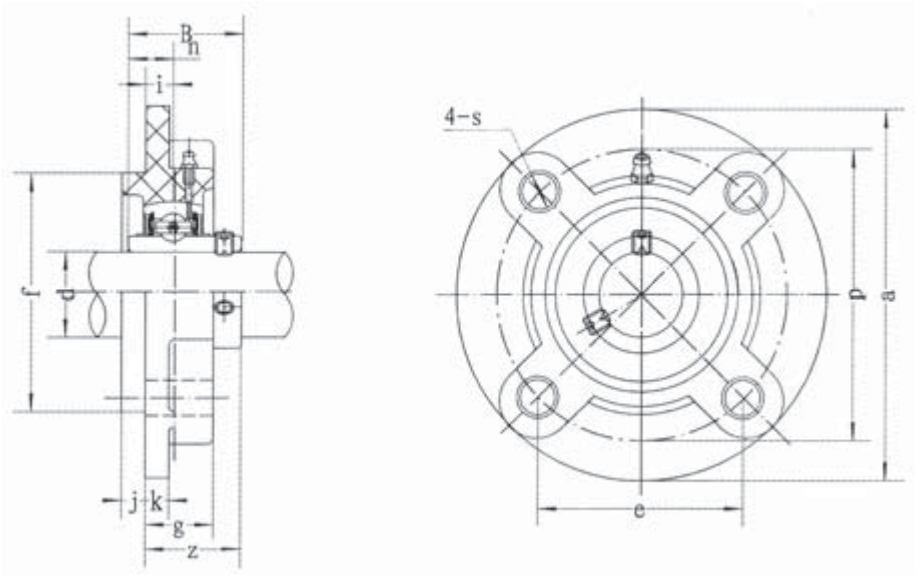

Housing	mm	a	p	e	i	s	j	k	g	f	z	t	B	n	Kg	Bolt D	Nm	Bearing
TFC204	20	100	78	55.1	10	12	5	7	20.5	62	28.3	32.5	31	12.7	0.59	M10	18	SUC204
TFC205	25	115	90	63.6	10	12	6	7	21	70	29.8	34	34.1	14.3	0.71	M10	25	SUC205
TFC206	30	125	100	70.7	10	12	8	8	23	80	32.2	36.5	38.1	15.9	0.94	M10	30	SUC206
TFC207	35	135	110	77.8	11	14	8	9	26	90	36.4	41	42.9	17.5	1.17	M12	35	SUC207
TFC208	40	145	120	84.8	11	14	10	9	26	100	41.2	45.5	49.2	19	1.42	M12	40	SUC208
TFC209	45	160	132	93.3	10	16	12	14	26	105	40.2	44.5	49.2	19	1.55	M14	45	SUC209
TFC210	50	165	138	97.6	10	16	12	14	28	110	42.6	47.5	51.6	19	1.76	M14	50	SUC210
TFC211	55	185	150	106.1	13	19	12	15	31	125	46.4	51	55.6	22.2	2.15	M16	55	SUC211
TFC212	60	195	160	113.1	17	19	12	15	36	135	56.7	61.5	65.1	25.4	2.64	M16	60	SUC212