Rotelle a rulli senza guida assiale con tenute (serie RNA22..2RS • RNA22..2RSX - NA22..2RS • NA22..2RSX)

Sealed yoke type track rollers without axial guidance (RNA22..2RS • RNA22..2RSX - NA22..2RS • NA22..2RSX series)

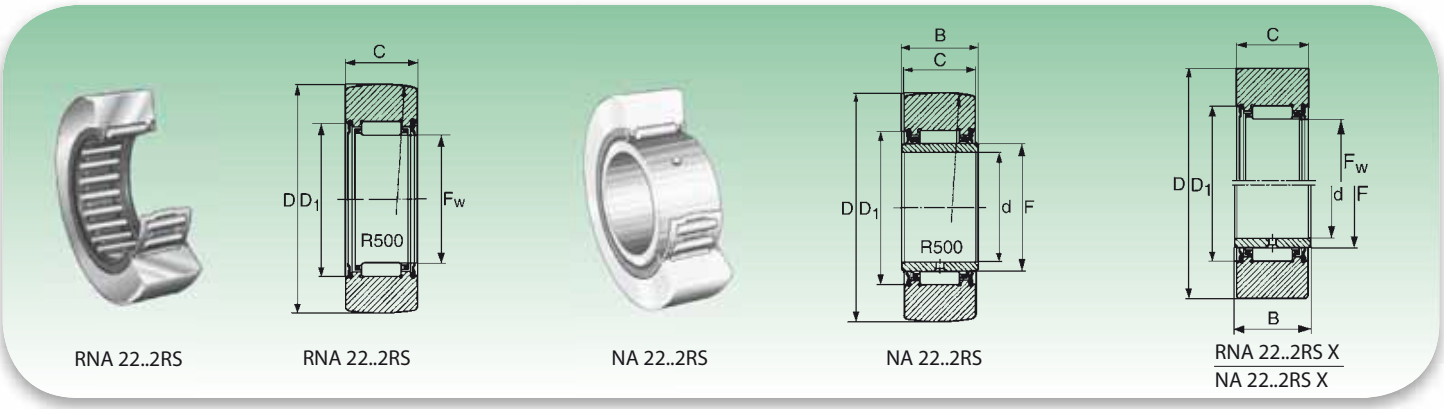

Diametro esterno (mm) *Outside Diameter (mm)*	Sigla [4] *Designation*				Dimensioni (mm) *Dimensions (mm)*						Coefficienti di carico N [2] *Basic Load Rating N*				Velocità limite *Limiting Speed*
	Senza anello interno *Without IR*	Peso (g) *Weight (g)*	Con anello interno *With IR*	Peso (g) *Weight (g)*	D	d	F [1] Fw	B	C	d_1	Dinamico C *Dynamic C*	Statico C_o *Static C_o*	Come rullo di appoggio *Yoke type track roller* Din. C_w *Dyn. C_w*	Stat. C_{ow} *Stat. C_{ow}*	Grasso [3] *Grease* (N° giri max) *(max rpm)*
19	**RNA 22/6 2RS**	18	**NA 22/6 2RS**	22	19	6	10	12	11.8	16	5 050	4 400	3 700	3 500	18 000
	RNA 22/6 2RS X	18	**NA 22/6 2RS X**	22	19	6	10	12	11.8	16	5 050	4 400	3 700	3 500	18 000
24	**RNA 22/8 2RS**	29	**NA 22/8 2RS**	34	24	8	12	12	11.8	18	5 400	5 200	4 600	4 600	14 000
	RNA 22/8 2RS X	29	**NA 22/8 2RS X**	34	24	8	12	12	11.8	18	5 400	5 200	4 600	4 600	14 000
30	**RNA 2200 2RS**	52	**NA 2200 2RS**	60	30	10	14	14	13.8	20	7 400	7 900	6 700	7 600	11 000
	RNA 2200 2RS X	52	**NA 2200 2RS X**	60	30	10	14	14	13.8	20	7 400	7 900	6 700	7 600	11 000
32	**RNA 2201 2RS**	57	**NA 2201 2RS**	67	32	12	16	14	13.8	22	8 300	9 400	7 200	8 600	9 500
	RNA 2201 2RS X	57	**NA 2201 2RS X**	67	32	12	16	14	13.8	22	8 300	9 400	7 200	8 600	9 500
35	**RNA 2202 2RS**	60	**NA 2202 2RS**	75	35	15	20	14	13.8	26	9 300	11 700	7 300	9 100	7 000
	RNA 2202 2RS X	60	**NA 2202 2RS X**	75	35	15	20	14	13.8	26	9 300	11 700	7 300	9 100	7 000
40	**RNA 2203 2RS**	94	**NA 2203 2RS**	112	40	17	22	16	15.8	28	11 600	15 900	9 400	13 100	6 000
	RNA 2203 2RS X	94	**NA 2203 2RS X**	112	40	17	22	16	15.8	28	11 600	15 900	9 400	13 100	6 000
47	**RNA 2204 2RS**	152	**NA 2204 2RS**	177	47	20	25	18	17.8	33	18 000	21 200	14 450	17 400	4 600
	RNA 2204 2RS X	152	**NA 2204 2RS X**	177	47	20	25	18	17.8	33	18 000	21 200	14 450	17 400	4 600
52	**RNA 2205 2RS**	179	**NA 2205 2RS**	209	52	25	30	18	17.8	38	20 000	25 650	14 900	19 000	3 500
	RNA 2205 2RS X	179	**NA 2205 2RS X**	209	52	25	30	18	17.8	38	20 000	25 650	14 900	19 000	3 500
62	**RNA 2206 2RS**	284	**NA 2206 2RS**	324	62	30	35	20	19.8	43	22 200	30 400	17 400	24 300	2 800
	RNA 2206 2RS X	284	**NA 2206 2RS X**	324	62	30	35	20	19.8	43	22 200	30 400	17 400	24 300	2 800
72	**RNA 2207 2RS**	432	**NA 2207 2RS**	505	72	35	42	23	22.7	50	28 500	44 200	22 000	33 700	2 200
	RNA 2207 2RS X	432	**NA 2207 2RS X**	505	72	35	42	23	22.7	50	28 500	44 200	22 000	33 700	2 200
80	**RNA 2208 2RS**	530	**NA 2208 2RS**	628	80	40	48	23	22.7	57	36 600	55 100	26 200	38 500	1 700
	RNA 2208 2RS X	530	**NA 2208 2RS X**	628	80	40	48	23	22.7	57	36 600	55 100	26 200	38 500	1 700
85	**RNA 2209 2RS**	545	**NA 2209 2RS**	655	85	45	52	23	22.7	62	38 500	60 800	27 100	40 850	1 600
	RNA 2209 2RS X	545	**NA 2209 2RS X**	655	85	45	52	23	22.7	62	38 500	60 800	27 100	40 850	1 600
90	**RNA 2210 2RS**	563	**NA 2210 2RS**	690	90	50	58	23	22.7	68	40 400	66 500	26 600	40 400	1 300
	RNA 2210 2RS X	563	**NA 2210 2RS X**	690	90	50	58	23	22.7	68	40 400	66 500	26 600	40 400	1 300

1) **F= Diametro pista di rotolamento dell'anello interno.**
F= Diameter of rolling groove on inner ring.
F_w= Tolleranza diametro del cerchio dato dai rullini.
F_w= Diameter tolerance of circle given by needle rollers.

2) **C e C_o coefficienti di carico: per utilizzo con accoppiamento come cuscinetti volventi.**
C and C_o load ratings: coupling as bearings.
C_w e C_{ow} coefficienti di carico: per utilizzo come rullo d'appoggio.
C_w and C_{ow} load ratings: used as roller support.

3) **Con lubrificazione ad olio il limite dei giri aumenta del 25% circa.**
With oil lubrication, number of allowed revolutions increases of about 25%.

4) **Suffisso x: anello esterno cilindrico**
X suffix: outer cylindrical ring

INTERNATIONAL BEARING SERVICES

Rotelle a rulli con guida assiale (serie NATR • NATR..PP - NATV • NATV..PP)

Yoke type track rollers with axial guidance (NATR • NATR..PP - NATV • NATV..PP series)

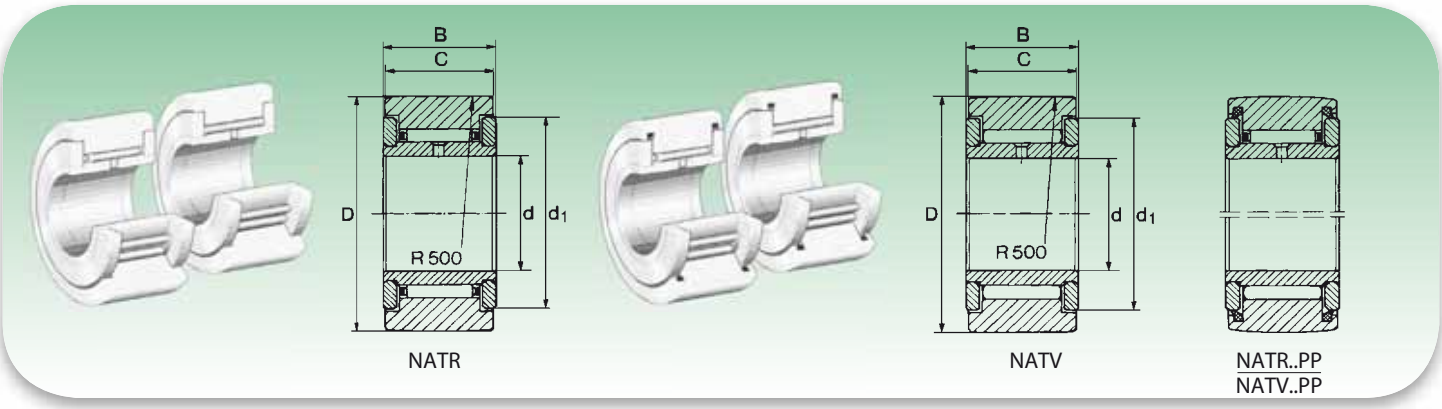

Diametro esterno (mm) *Outside Diameter (mm)*	Sigla [1] *Designation*				Dimensioni (mm) *Dimensions (mm)*					Coefficienti di carico N [2] *Basic Load Rating N*				Velocità limite *Limiting Speed*
	Con anello interno *With IR*	Peso (g) *Weight (g)*	Con anello interno e tenute supplementari *With IR and additional seals*	Peso (g) *Weight (g)*	d	D	B	C	d_1	Dinamico C *Dynamic C*	Statico C_o *Static C_o*	Come rullo di appoggio *Yoke type track roller* Din. C_w *Dyn. C_w*	Stat. C_{ow} *Stat. C_{ow}*	Grasso [3] *Grease* (N° giri max) *(max rpm)*
16	**NATR 5**	14	**NATR 5 PP**	14	5	16	12	11	12.5	3 600	3 560	3 000	3 100	22 000 [4]
	NATV 5	15	**NATV 5 PP**	15	5	16	12	11	12.5	6 100	8 100	4 600	6 200	8 500
19	**NATR 6**	20	**NATR 6 PP**	19	6	19	12	11	15	4 050	4 370	3 300	3 700	20 000 [4]
	NATV 6	21	**NATV 6 PP**	21	6	19	12	11	15	6 950	10 250	5 200	7 500	7 000
24	**NATR 8**	41	**NATR 8 PP**	38	8	24	15	14	19	6 450	7 300	5 200	6 080	15 000 [4]
	NATV 8	42	**NATV 8 PP**	41	8	24	15	14	19	9 900	14 800	7 400	10 800	5 500
30	**NATR 10**	64	**NATR 10 PP**	61	10	30	15	14	23	7 700	9 200	6 500	8 000	11 000 [4]
	NATV 10	65	**NATV 10 PP**	64	10	30	15	14	23	11 600	18 000	9 000	13 850	4 500
32	**NATR 12**	71	**NATR 12 PP**	66	12	32	15	14	25	8 300	10 450	6 550	8 350	9 000
	NATV 12	72	**NATV 12 PP**	69	12	32	15	14	25	12 540	20 600	9 200	14 600	3 900
35	**NATR 15**	104	**NATR 15 PP**	95	15	35	19	18	27.6	12 250	18 000	9 200	13 400	7 000
	NATV 15	109	**NATV 15 PP**	101	15	35	19	18	27.6	17 400	33 250	12 150	21 850	3 400
40	**NATR 17**	144	**NATR 17 PP**	139	17	40	21	20	31.5	13 500	19 400	10 350	14 700	6 000
	NATV 17	152	**NATV 17 PP**	147	17	40	21	20	31.5	19 950	37 500	14 050	25 200	2 900
47	**NATR 20**	246	**NATR 20 PP**	236	20	47	25	24	36.5	18 500	30 400	14 700	24 200	4 900
	NATV 20	254	**NATV 20 PP**	245	20	47	25	24	36.5	26 600	56 050	19 550	39 900	2 600
52	**NATR 25**	275	**NATR 25 PP**	271	25	52	25	24	41.5	20 150	36 100	14 600	25 200	3 600
	NATV 25	285	**NATV 25 PP**	281	25	52	25	24	41.5	29 450	68 400	19 500	41 800	2 100
62	**NATR 30**	470	**NATR 30 PP**	444	30	62	29	28	51	32 300	56 000	22 450	36 600	2 600
	NATV 30	481	**NATV 30 PP**	468	30	62	29	28	51	46 100	102 600	29 000	59 850	1 700
72	**NATR 35**	635	**NATR 35 PP**	547	35	72	29	28	58	35 150	65 550	24 200	42 300	2 000
	NATV 35	647	**NATV 35 PP**	630	35	72	29	28	58	50 350	120 650	31 350	69 350	1 400
80	**NATR 40**	805	**NATR 40 PP**	795	40	80	32	30	66	46 550	89 300	31 350	56 000	1 700
	NATV 40	890	**NATV 40 PP**	832	40	80	32	30	66	62 700	151 050	38 950	85 500	1 300
90	**NATR 50**	960	**NATR 50 PP**	867	50	90	32	30	76	49 400	102 600	30 400	56 050	1 300
	NATV 50	990	**NATV 50 PP**	969	50	90	32	30	76	68 400	181 450	38 500	88 350	1 000

1) **Suffisso x: anello esterno cilindrico**
X suffix: outer cylindrical ring

2) **C e C_o coefficienti di carico: per utilizzo con accoppiamento come cuscinetti volventi.**
C and C_o load ratings: coupling as bearings.

C_w e C_{ow} coefficienti di carico: per utilizzo come rullo d'appoggio.
C_w and C_{ow} load ratings: used as roller support.

3) **Con lubrificazione ad olio il limite dei giri aumenta del 25% circa.**
With oil lubrication, number of allowed revolutions increases of about 25%.

4) **Per esecuzione con tenute ridurre il valore del 30%**
Value must be reduced of 30% in case of execution with seals

INTERNATIONAL BEARING SERVICES

Rotelle a rulli con guida assiale, a pieno riempimento di rulli , schermati (serie NNTR)

Yoke type track rollers with axial guidance, full complement cylindrical roller set, sealed on both sides (NNTR series)

NNTR.ZZ

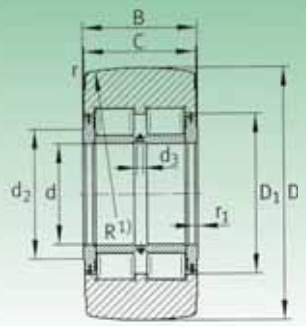

Diametro esterno (mm) *Outside Diameter (mm)*	Sigla *Designation*	Peso (g) *Weight (g)*	Dimensioni (mm) *Dimensions (mm)*				Dimensioni delle parti adiacenti *Mounting dimensions*			Fori di lubrificazione *Lubrification holes*	Coefficienti di carico N Basic *Load Rating N*		Velocità limite *Limiting speed*
			d	D	B	C	d_2	D_1	d_3		Dinamico C_W *Dynamic C_W*	Statico C_{OW} *Static C_{OW}*	(N° di giri max) *(max rpm)*
130	**NNTR 50X130X65 ZZ**	5 200	50	130	65	63	63	80	3	3	192 000	250 000	1 100
140	**NNTR 55X140X70 ZZ**	6 400	55	140	70	68	73	91	4	3	223 000	300 000	850
150	**NNTR 60X150X75 ZZ**	7 800	60	150	75	73	78	97	4	3	255 000	350 000	800
160	**NNTR 65X160X75 ZZ**	8 800	65	160	75	73	82	103	5	3	275 000	370 000	700
180	**NNTR 70X180X85 ZZ**	13 000	70	180	85	83	92	115	5	3	350 000	490 000	600
200	**NNTR 80X200X90 ZZ**	16 800	80	200	90	88	102	127	5	3	410 000	580 000	500
220	**NNTR 90X220X100 ZZ**	22 500	90	220	100	98	119	146	5	3	495 000	720 000	400
240	**NNTR 100X240X105 ZZ**	28 000	100	240	105	103	132	160	6	6	560 000	830 000	340
260	**NNTR 110X260X115 ZZ**	35 600	110	260	115	113	143	174	6	6	670 000	1 020 000	300
290	**NNTR 120X290X135 ZZ**	52 800	120	290	135	133	155	191	8	6	890 000	1 370 000	260
310	**NNTR 130X310X146 ZZ**	65 200	130	310	146	144	165	204	8	6	1 020 000	1 600 000	240

INTERNATIONAL BEARING SERVICES

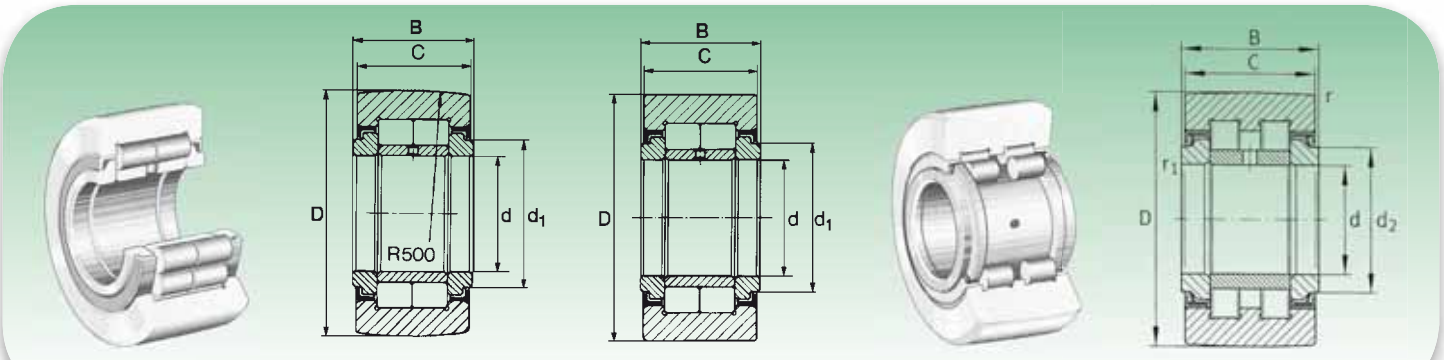

Diametro esterno (mm) *Outside Diameter (mm)*	Sigla *Designation* Con anello interno *With IR*	Peso (g) *Weigth (g)*	Dimensioni (mm) *Dimensions (mm)* d	D	B	C	d_1	Coefficienti di carico N *Basic Load Rating N* Dinamico *Dynamic* C_w	Statico *Static* C_0	Dinamico *Dynamic* C_w	Statico *Static* C_w	Numero di giri 1) *N. rpm 1)* n_D Grasso / n_D *Grease* min $^{-1}$
35	**NUTR 15 35**	99	15	35	19	18	20	8 600	16 800	15 000	16 800	6 500
	PWTR 15.2RS	99	15	35	19	18	20	9 400	11 300	11 600	11 300	6 000
40	**NUTR 17 40**	147	17	40	21	20	22	13 100	22 600	18 400	22 600	5 500
	PWTR 17.2RS	147	17	40	21	20	22	13 800	13 800	13 200	13 800	5 000
42	**NUTR 15 42**	158	15	42	19	18	20	21 900	21 900	18 100	21 900	6 500
	PWTR 15 42.2RS	158	15	42	19	18	20	14 100	14 100	13 500	14 100	6 000
47	**NUTR 17 47**	220	17	47	21	20	22	28 000	28 000	21 300	28 000	5 500
	PWTR 17 47.2RS	220	17	47	21	20	22	16 400	16 400	14 800	16 400	5 000
	NUTR 20 47	245	20	47	25	24	27	16 400	33 000	28 000	35 000	4 200
	PWTR 20.2RS	245	20	47	25	24	27	18 300	25 500	23 200	25 500	3 800
52	**NUTR 20 52**	321	20	52	25	24	27	38 500	41 000	31 500	41 000	4 200
	PWTR 20 52.2RS	321	20	52	25	24	27	29 500	29 500	25 500	29 500	3 800
	NUTR 25 52	281	25	52	25	24	31	17 300	34 500	29 000	37 500	4 200
	PWTR 25.2RS	281	25	52	25	24	31	19 300	28 000	24 200	28 000	3 800
62	**NUTR 25 62**	450	25	62	25	24	31	50 000	50 000	35 500	50 000	4 200
	PWTR 25 62.2RS	450	25	62	25	24	31	36 000	36 000	29 000	36 000	3 800
	NUTR 30 62	465	30	62	29	28	38	23 500	46 500	40 000	50 000	2 600
	PWTR 30.2RS	465	30	62	29	28	38	25 500	39 500	35 000	39 500	2 200
72	**NUTR 30 72**	697	30	72	29	28	38	64 000	64 000	47 500	64 000	2 600
	PWTR 30 72.2RS	697	30	72	29	28	38	49 000	49 000	41 000	49 000	2 200
	NUTR 35 72	630	35	72	29	28	44	32 000	60 000	44 500	60 000	2 100
	PWTR 35.2RS	630	35	72	29	28	44	34 500	46 500	38 500	46 500	1 800
80	**NUTR 35 80**	836	35	80	29	28	44	72 000	72 000	51 000	72 000	2 100
	PWTR 35 80.2RS	836	35	80	29	28	44	55 000	55 000	43 500	55 000	1 800
	NUTR 40 80	816	40	80	32	30	50.5	30 500	60 000	55 000	75 000	1 600
	PWTR 40.2RS	816	40	80	32	30	50.5	35 000	53 000	44 500	53 000	1 500
85	**NUTR 45 85**	883	45	85	32	30	55.2	31 500	61 000	56 000	78 000	1 400
	PWTR 45.2RS	883	45	85	32	30	55.2	36 000	55 000	45 000	55 000	1 300
90	**NUTR 40 90**	1 129	40	90	32	30	50.5	84 000	95 000	66 000	95 000	1 600
	PWTR 40 90.2RS	1 129	40	90	32	30	50.5	66 000	66 000	52 000	66 000	1 500
	NUTR 50 90	950	50	90	32	30	59.8	32 000	62 000	57 000	81 000	1 300
	PWTR 50.2RS	950	50	90	32	30	59.8	37 000	57 000	45 500	57 000	1 100
100	**NUTR 45 100**	1 396	45	100	32	30	55.2	106 000	107 000	71 000	107 000	1 400
	PWTR 45 100.2RS	1 396	45	100	32	30	55.2	74 000	74 000	56 000	74 000	1 300
110	**NUTR 50 110**	1 690	50	110	32	30	59.8	120 000	120 000	76 000	120 000	1 300
	PWTR 50 110.2RS	1 690	50	110	32	30	59.8	82 000	82 000	59 000	82 000	1 100

4) Suffisso x: anello esterno cilindrico
X suffix: outer cylindrical ring

INTERNATIONAL BEARING SERVICES

Perni folli a rullini (serie KR • KR..PP - KRV • KRV..PP - KRE • KRE..PP - KRVE • KRVE..PP)

Stud type needle track roller (KR • KR..PP - KRV • KRV..PP - KRE • KRE..PP - KRVE • KRVE..PP series)

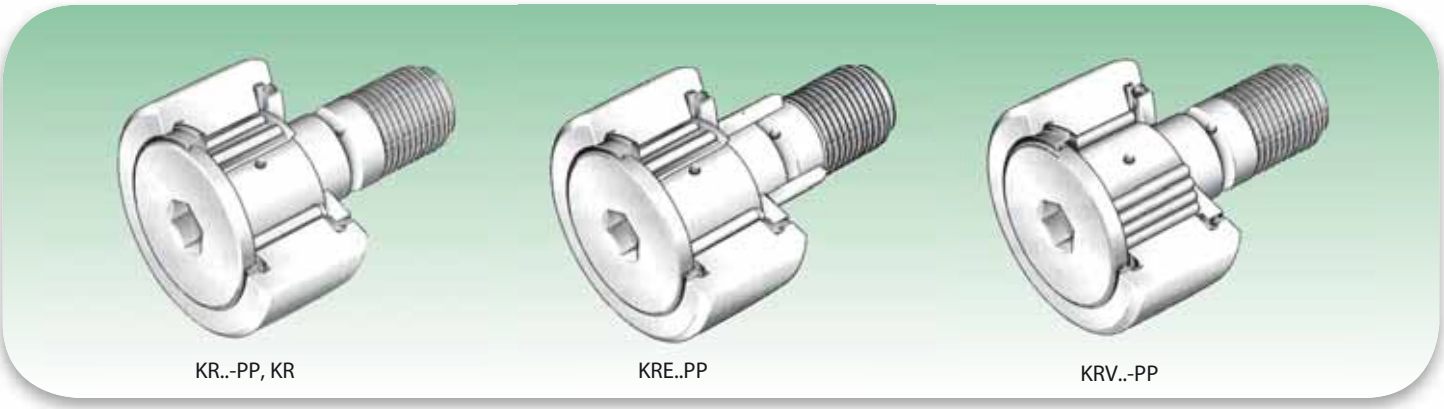

KR..-PP, KR — KRE..PP — KRV..-PP

Diametro esterno (mm) *Outside diameter (mm)*	Sigla [1] *Designation*				Dimensioni (mm) *Dimensions (mm)*										
	Senza eccentrico *Without eccentric*	Peso (g) *Weight (g)*	Con eccentrico *With eccentric*	Peso (g) *Weight (g)*	D	d_1 h7	B	B_1 max	B_2	B_3	C	C_1	r min.	d_2	d_3
16	**KR16**	19	**KRE16**	20	16	6	28	12.2	16	-	11	0.6	0.15	12.5	-
	KR16-PP	18	**KRE16-PP**	20	16	6	28	12.2	16	-	11	0.6	0.15	12.5	-
	KRV16	18	**KRVE16**	22	16	6	28	12.2	16	-	11	0.6	0.15	12.5	-
	KRV16-PP	19	**KRVE16-PP**	22	16	6	28	12.2	16	-	11	0.6	0.15	12.5	-
19	**KR19**	29	**KRE19**	32	19	8	32	12.2	20	-	11	0.6	0.15	15	-
	KR19-PP	29	**KRE19-PP**	32	19	8	32	12.2	20	-	11	0.6	0.15	15	-
	KRV19	29	**KRVE19**	35	19	8	32	12.2	20	-	11	0.6	0.15	15	-
	KRV19-PP	31	**KRVE19-PP**	35	19	8	32	12.2	20	-	11	0.6	0.15	15	-
22	**KR22**	45	**KRE22**	47	22	10	36	13.2	23	-	12	0.6	0.3	17.5	-
	KR22-PP	43	**KRE22-PP**	47	22	10	36	13.2	23	-	12	0.6	0.3	17.5	-
	KRV22	43	**KRVE22**	49	22	10	36	13.2	23	-	12	0.6	0.3	17.5	-
	KRV22-PP	45	**KRVE22-PP**	49	22	10	36	13.2	23	-	12	0.6	0.3	17.5	-
26	**KR26**	59	**KRE26**	62	26	10	36	13.2	23	-	12	0.6	0.3	17.5	-
	KR26-PP	57	**KRE26-PP**	62	26	10	36	13.2	23	-	12	0.6	0.3	17.5	-
	KRV26	57	**KRVE26**	65	26	10	36	13.2	23	-	12	0.6	0.3	17.5	-
	KRV26-PP	59	**KRVE26-PP**	65	26	10	36	13.2	23	-	12	0.6	0.3	17.5	-
30	**KR30**	92	**KRE30**	93	30	12	40	15.2	25	6	14	0.6	0.6	23	3
	KR30-PP	88	**KRE30-PP**	93	30	12	40	15.2	25	6	14	0.6	0.6	23	3
	KRV30	88	**KRVE30**	94	30	12	40	15.2	25	6	14	0.6	0.6	23	3
	KRV30-PP	91	**KRVE30-PP**	94	30	12	40	15.2	25	6	14	0.6	0.6	23	3
32	**KR32**	103	**KRE32**	104	32	12	40	15.2	25	6	14	0.6	0.6	23	3
	KR32-PP	98	**KRE32-PP**	104	32	12	40	15.2	25	6	14	0.6	0.6	23	3
	KRV32	98	**KRVE32**	105	32	12	40	15.2	25	6	14	0.6	0.6	23	3
	KRV32-PP	101	**KRVE32-PP**	105	32	12	40	15.2	25	6	14	0.6	0.6	23	3
35	**KR35**	169	**KRE35**	181	35	16	52	19.6	32.5	8	18	0.8	0.6	27.6	3
	KR35-PP	169	**KRE35-PP**	181	35	16	52	19.6	32.5	8	18	0.8	0.6	27.6	3
	KRV35	171	**KRVE35**	183	35	16	52	19.6	32.5	8	18	0.8	0.6	27.6	3
	KRV35-PP	171	**KRVE35-PP**	183	35	16	52	19.6	32.5	8	18	0.8	0.6	27.6	3
40	**KR40**	247	**KRE40**	260	40	18	58	21.6	36.5	8	20	0.8	1	31.5	3
	KR40-PP	247	**KRE40-PP**	260	40	18	58	21.6	36.5	8	20	0.8	1	31.5	3
	KRV40	249	**KRVE40**	262	40	18	58	21.6	36.5	8	20	0.8	1	31.5	3
	KRV40-PP	249	**KRVE40-PP**	262	40	18	58	21.6	36.5	8	20	0.8	1	31.5	3

1) Anello esterno con superficie cilindrica: suffisso X. / *Outer ring with cylindric surface: X ref.*
2) C e C_0 coefficienti di carico: per utilizzo con accoppiamento con cuscinetti volventi. / *C and C_0 load ratings: coupling with bearings.*
3) Con lubrificazione ad olio il limite dei giri aumenta circa del 25%. / *With oil lubrication, number of revolutions improves of about 25%.*

INTERNATIONAL BEARING SERVICES

Perni folli a rullini (serie KR • KR..PP - KRV • KRV..PP - KRE • KRE..PP - KRVE • KRVE..PP)

Stud type needle track roller (KR • KR..PP - KRV • KRV..PP - KRE • KRE..PP - KRVE • KRVE..PP series)

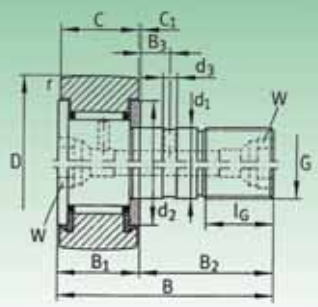

KR..-PP, KR

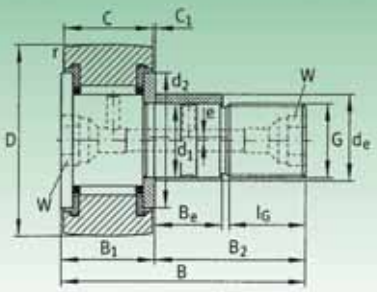

KRE..-PP

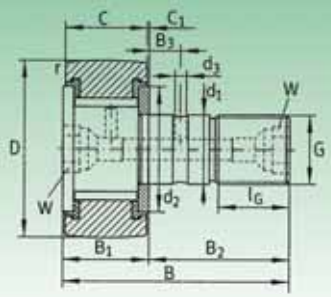

KRV..-PP

Dimensioni (mm) *Dimensions (mm)*						Nippli ingrassatori *Grease nipples*	Momento di serraggio *Nut tightening torque*	Coefficienti di carico [2] *Basic load rating* [2]		Carico limite di fatica *Fatigue load*	Velocità limite *Limiting speed*
G	l_G	W	Eccentrico - *Eccentric*				M_A	Dinamico *Dynamic*	Statico *Static*	C_{uw}	Grasso - *Grease* [3]
			d_e h9	B_e	e		N_m	C_w	C_{0w}	N	N° giri max- *N° max rpm*
M6(X1)	8	-	9	7	0.5	NIP1	3	3 150	3 300	415	14 000
M6(X1)	8	-	9	7	0.5	NIP1	3	3 150	3 300	415	14 000
M6(X1)	8	-	9	7	0.5	NIP1	3	4 900	6 500	860	3 000
M6(X1)	8	-	9	7	0.5	NIP1	3	4 900	6 500	860	3 000
M8(X1,25)	10	-	11	9	0.5	NIP1	8	3 500	3 900	485	11 000
M8(X1,25)	10	-	11	9	0.5	NIP1	8	3 500	3 900	485	11 000
M8(X1,25)	10	-	11	9	0.5	NIP1	8	5 400	7 900	1 040	3 100
M8(X1,25)	10	-	11	9	0.5	NIP1	8	5 400	7 900	1 040	3 100
M10X1	12	-	13	10	0.5	NIP1X4.5	15	4 500	5 200	650	8 000
M10X1	12	-	13	10	0.5	NIP1X4.5	15	4 500	5 200	650	8 000
M10X1	12	-	13	10	0.5	NIP1X4.5	15	6 200	9 100	1 110	2 600
M10X1	12	-	13	10	0.5	NIP1X4.5	15	6 200	9 100	1 110	2 600
M10X1	12	5	13	10	0.5	NIP1X4.5	15	5 100	6 200	770	8 000
M10X1	12	5	13	10	0.5	NIP1X4.5	15	5 100	6 200	770	8 000
M10X1	12	5	13	10	0.5	NIP1X4.5	15	7 300	11 300	1 380	2 600
M10X1	12	5	13	10	0.5	NIP1X4.5	15	7 300	11 300	1 380	2 600
M12X1,5	13	6	15	11	0.5	NIP1X4.5	22	6 800	8 400	1 070	5 500
M12X1,5	13	6	15	11	0.5	NIP1X4.5	22	6 800	8 400	1 070	5 500
M12X1,5	13	6	15	11	0.5	NIP1X4.5	22	9 500	14 600	1 840	2 100
M12X1,5	13	6	15	11	0.5	NIP1X4.5	22	9 500	14 600	1 840	2 100
M12X1,5	13	6	15	11	0.5	NIP1X4.5	22	7 100	8 900	1 140	5 500
M12X1,5	13	6	15	11	0.5	NIP1X4.5	22	7 100	8 900	1 140	5 500
M12X1,5	13	6	15	11	0.5	NIP1X4.5	22	10 500	15 800	1 990	2 100
M12X1,5	13	6	15	11	0.5	NIP1X4.5	22	10 500	15 800	1 990	2 100
M16X1,5	17	8	20	14	1	NIP2X7.5	58	9 800	14 100	1 700	3 600
M16X1,5	17	8	20	14	1	NIP2X7.5	58	9 800	14 100	1 700	3 600
M16X1,5	17	8	20	14	1	NIP2X7.5	58	12 800	23 000	2 900	1 600
M16X1,5	17	8	20	14	1	NIP2X7.5	58	12 800	23 000	2 900	1 600
M18X1,5	19	8	22	16	1	NIP2X7.5	87	10 900	15 500	1 850	2 900
M18X1,5	19	8	22	16	1	NIP2X7.5	87	10 900	15 500	1 850	2 900
M18X1,5	19	8	22	16	1	NIP2X7.5	87	14 800	26 500	3 050	1 400
M18X1,5	19	8	22	16	1	NIP2X7.5	87	14 800	26 500	3 050	1 400

INTERNATIONAL BEARING SERVICES

Perni folli a rullini (serie KR • KR..PP - KRV • KRV..PP - KRE • KRE..PP - KRVE • KRVE..PP)

Stud type needle track roller (KR • KR..PP - KRV • KRV..PP - KRE • KRE..PP - KRVE • KRVE..PP series)

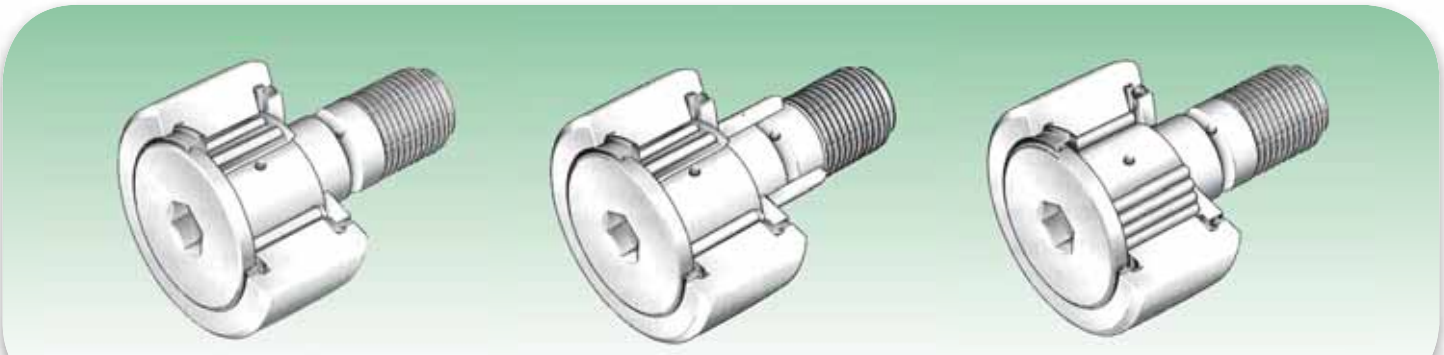

KR..-PP, KR — KRE..PP — KRV..-PP

Diametro esterno (mm) *Outside diameter (mm)*	Sigla [1] *Designation*				Dimensioni (mm) *Dimensions (mm)*										
	Senza eccentrico *Without eccentric*	Peso (g) *Weight (g)*	Con eccentrico *With eccentric*	Peso (g) *Weight (g)*	D	d_1 h7	B	B_1 max	B_2	B_3	C	C_1	r min.	d_2	d_3
47	**KR47**	386	**KRE47**	400	47	20	66	25.6	40.5	9	24	0.8	1	36.5	4
	KR47-PP	386	**KRE47-PP**	400	47	20	66	25.6	40.5	9	24	0.8	1	36.5	4
	KRV47	390	**KRVE47**	409	47	20	66	25.6	40.5	9	24	0.8	1	36.5	4
	KRV47-PP	390	-	409	47	20	66	25.6	40.5	9	24	0.8	1	36.5	4
52	**KR52**	461	**KRE52**	473	52	20	66	25.6	40.5	9	24	0.8	1	36.5	4
	KR52-PP	461	**KRE52-PP**	473	52	20	66	25.6	40.5	9	24	0.8	1	36.5	4
	KRV52	465	**KRVE52**	484	52	20	66	25.6	40.5	9	24	0.8	1	36.5	4
	KRV52-PP	465	-	484	52	20	66	25.6	40.5	9	24	0.8	1	36.5	4
62	**KR62**	790	**KRE62**	798	62	24	80	30.6	49.5	11	28	0.8	1	44	4
	KR62-PP	790	**KRE62-PP**	798	62	24	80	30.6	49.5	11	28	0.8	1	44	4
	KRV62	802	**KRVE62**	830	62	24	80	30.6	49.5	11	28	0.8	1	44	4
	KRV62-PP	802	-	830	62	24	80	30.6	49.5	11	28	0.8	1	44	4
72	**KR72**	1 010	**KRE72**	1 038	72	24	80	30.6	49.5	11	28	0.8	1.1	44	4
	KR72-PP	1 010	**KRE72-PP**	1 038	72	24	80	30.6	49.5	11	28	0.8	1.1	44	4
	KRV72	1 045	**KRVE72**	1 073	72	24	80	30.6	49.5	11	28	0.8	1.1	44	4
	KRV72-PP	1 045	-	1 073	72	24	80	30.6	49.5	11	28	0.8	1.1	44	4
80	**KR80**	1 608	**KRE80**	1 665	80	30	100	37	63	15	35	1	1.1	53	4
	KR80-PP	1 608	**KRE80-PP**	1 665	80	30	100	37	63	15	35	1	1.1	53	4
	KRV80	1 636	**KRVE80**	1 900	80	30	100	37	63	15	35	1	1.1	53	4
	KRV80-PP	1 636	-	1 900	80	30	100	37	63	15	35	1	1.1	53	4
85	**KR85**	1 740	**KRE85**	2 075	85	30	100	37	63	15	35	1	1.1	53	4
	KR85-PP	1 740	**KRE85-PP**	2 075	85	30	100	37	63	15	35	1	1.1	53	4
90	**KR90**	1 950	**KRE90**	2 260	90	30	100	37	63	15	35	1	1.1	53	4
	KR90-PP	1 950	**KRE90-PP**	2 260	90	30	100	37	63	15	35	1	1.1	53	4
	KRV90	1 970	**KRVE90**	2 300	90	30	100	37	63	15	35	1	1.1	53	4
	KRV90-PP	1 970	-	2 300	90	30	100	37	63	15	35	1	1.1	53	4

1) Anello esterno con superficie cilindrica: suffisso X. / *Outer ring with cylindric surface: X ref.*
2) C e C_0 coefficienti di carico: per utilizzo con accoppiamento con cuscinetti volventi. / *C and C_0 load ratings: coupling with bearings.*
3) Con lubrificazione ad olio il limite dei giri aumenta circa del 25%. / *With oil lubrication, number of revolutions improves of about 25%.*

INTERNATIONAL BEARING SERVICES

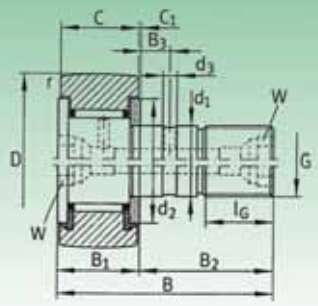

KR..-PP, KR

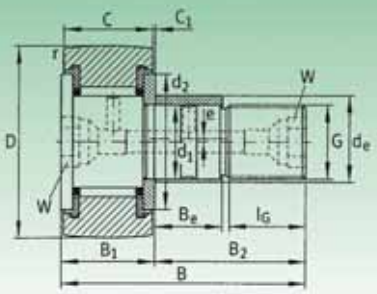

KRE..-PP

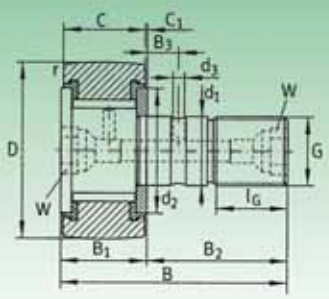

KRV..-PP

Dimensioni (mm) *Dimensions (mm)*						Nippli ingrassatori *Grease nipples*	Momento di serraggio *Nut tightening torque*	Coefficienti di carico [2] *Basic load rating* [2]		Carico limite di fatica *Fatigue load*	Velocità limite *Limiting speed*
G	l_G	W	Eccentrico - *Eccentric*				M_A	Dinamico *Dynamic*	Statico *Static*	C_{uw}	Grasso - *Grease* [3]
			d_e h9	B_e	e		N_m	C_w	C_{0w}	N	N° giri max - *N° max rpm*
M20X1,5	21	10	24	18	1	NIP2X7,5	120	15 500	25 500	3 000	2 400
M20X1,5	21	10	24	18	1	NIP2X7,5	120	15 500	25 500	3 000	2 400
M20X1,5	21	10	24	18	1	NIP2X7,5	120	20 600	42 000	5 200	1 300
M20X1,5	21	10	24	18	1	NIP2X7,5	120	20 600	42 000	5 200	1 300
M20X1,5	21	10	24	18	1	NIP2X7,5	120	16 700	29 000	3 400	2 400
M20X1,5	21	10	24	18	1	NIP2X7,5	120	16 700	29 000	3 400	2 400
M20X1,5	21	10	24	18	1	NIP2X7,5	120	22 600	48 000	5 900	1 300
M20X1,5	21	10	24	18	1	NIP2X7,5	120	22 600	48 000	5 900	1 300
M24X1,5	25	14	28	22	1	NIP3X9,5	220	26 500	48 000	6 100	1 900
M24X1,5	25	14	28	22	1	NIP3X9,5	220	26 500	48 000	6 100	1 900
M24X1,5	25	14	28	22	1	NIP3X9,5	220	34 000	75 000	9 800	1 100
M24X1,5	25	14	28	22	1	NIP3X9,5	220	34 000	75 000	9 800	1 100
M24X1,5	25	14	28	22	1	NIP3X9,5	220	28 000	53 000	6 700	1 900
M24X1,5	25	14	28	22	1	NIP3X9,5	220	28 000	53 000	6 700	1 900
M24X1,5	25	14	28	22	1	NIP3X9,5	220	36 500	85 000	11 100	1 100
M24X1,5	25	14	28	22	1	NIP3X9,5	220	36 500	85 000	11 100	1 100
M30X1,5	32	14	35	29	1.5	NIP3X9,5	450	39 000	77 000	9 900	1 300
M30X1,5	32	14	35	29	1.5	NIP3X9,5	450	39 000	77 000	9 900	1 300
M30X1,5	32	14	35	29	1.5	NIP3X9,5	450	49 500	117 000	15 300	850
M30X1,5	32	14	35	29	1.5	NIP3X9,5	450	49 500	117 000	15 300	850
M30X1,5	32	14	35	29	1.5	NIP3X9,5	450	40 000	80 750	10 200	1 300
M30X1,5	32	14	35	29	1.5	NIP3X9,5	450	40 000	80 750	10 200	1 300
M30X1,5	32	14	35	29	1.5	NIP3X9,5	450	41 000	83 000	10 600	1 300
M30X1,5	32	14	35	29	1.5	NIP3X9,5	450	41 000	83 000	10 600	1 300
M30X1,5	32	14	35	29	1.5	NIP3X9,5	450	52 000	129 000	16 900	850
M30X1,5	32	14	35	29	1.5	NIP3X9,5	450	52 000	129 000	16 900	850

INTERNATIONAL BEARING SERVICES

Perni folli a rulli (serie NUKR • NUKRE • PWKR..2RS • PWKRE..2RS)

Stud type track roller (NUKR • NUKRE • PWKR..2RS • PWKRE..2RS series)

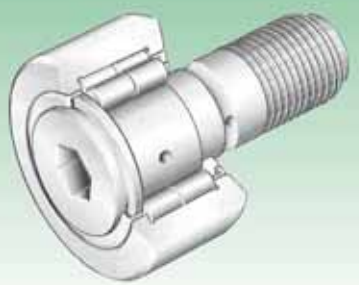

NUKR

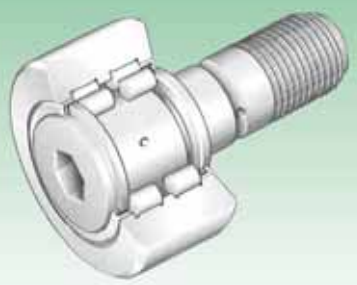

PWKR..2RS

Diametro esterno (mm) *Outside Diameter (mm)*	Sigla [1] *Designation*	Peso (g) *Weight (g)*	Con eccentrico *With eccentric*	Peso (g) *Weight (g)*	Dimensioni (mm) *Dimensions (mm)*											
					D	d_1 h7	B	B_1 max.	B_2	B_3	C	C_1	r min.	d_2	d_3	G
35	**NUKR35**	164	**-**	-	**35**	16	52	19.6	32.5	7.8	18	0.8	0.6	20	3	M16X1,5
	-	-	**NUKRE35**	177	**35**	16	52	22.6	29.5	-	18	3.8	0.6	27.6	-	M16X1,5
	PWKR35-2RS	164	**-**	-	**35**	16	52	19.6	32.5	7.8	18	0.8	0.6	20	3	M16X1,5
	-	-	**PWKRE35-2RS**	177	**35**	16	52	22.6	29.5	-	18	3.8	0.6	27.6	-	M16X1,5
40	**NUKR40**	242	**-**	-	**40**	18	58	21.6	36.5	8	20	0.8	1	22	3	M18X1,5
	-	-	**NUKRE40**	258	**40**	18	58	24.6	33.5	-	20	3.8	1	30	-	M18X1,5
	PWKR40-2RS	242	**-**	-	**40**	18	58	21.6	36.5	8	20	0.8	1	22	3	M18X1,5
	-	-	**PWKRE40-2RS**	258	**40**	18	58	24.6	33.5	-	20	3.8	1	30	-	M18X1,5
47	**NUKR47**	380	**NUKRE47**	400	**47**	20	66	25.6	40.5	9	24	0.8	1	27	4	M20X1,5
	PWKR47-2RS	380	**PWKRE47-2RS**	400	**47**	20	66	25.6	40.5	9	24	0.8	1	27	4	M20X1,5
52	**NUKR52**	450	**NUKRE52**	470	**52**	20	66	25.6	40.5	9	24	0.8	1	31	4	M20X1,5
	PWKR52-2RS	450	**PWKRE52-2RS**	470	**52**	20	66	25.6	40.5	9	24	0.8	1	31	4	M20X1,5
62	**NUKR62**	795	**NUKRE62**	824	**62**	24	80	30.6	49.5	11	28	1.3	1	38	4	M24X1,5
	PWKR62-2RS	795	**PWKRE62-2RS**	824	**62**	24	80	30.6	49.5	11	28	1.3	1	38	4	M24X1,5
72	**NUKR72**	1 020	**NUKRE72**	1 050	**72**	24	80	30.6	49.5	11	28	1.3	1.1	44	4	M24X1,5
	PWKR72-2RS	1 020	**PWKRE72-2RS**	1 050	**72**	24	80	30.6	49.5	11	28	1.3	1.1	44	4	M24X1,5
80	**NUKR80**	1 600	**NUKRE80**	1 670	**80**	30	100	37	63	15	35	1	1.1	47	4	M30X1,5
	PWKR80-2RS	1 600	**PWKRE80-2RS**	1 670	**80**	30	100	37	63	15	35	1	1.1	47	4	M30X1,5
90	**NUKR90**	1 960	**NUKRE90**	2 020	**90**	30	100	37	63	15	35	1	1.1	47	4	M30X1,5
	PWKR90-2RS	1 960	**PWKRE90-2RS**	2 020	**90**	30	100	37	63	15	35	1	1.1	47	4	M30X1,5

1) **Anello esterno con superficie cilindrica: suffisso X.**
Outer ring with cylindric surface: X ref.

2) **C e C_0 coefficienti di carico: per utilizzo con accoppiamento con cuscinetti volventi.**
C and C_0 load ratings: coupling with bearings.

3) **Con lubrificazione ad olio il limite dei giri aumenta circa del 25%.**
With oil lubrication, number of revolutions improves of about 25%.

INTERNATIONAL BEARING SERVICES

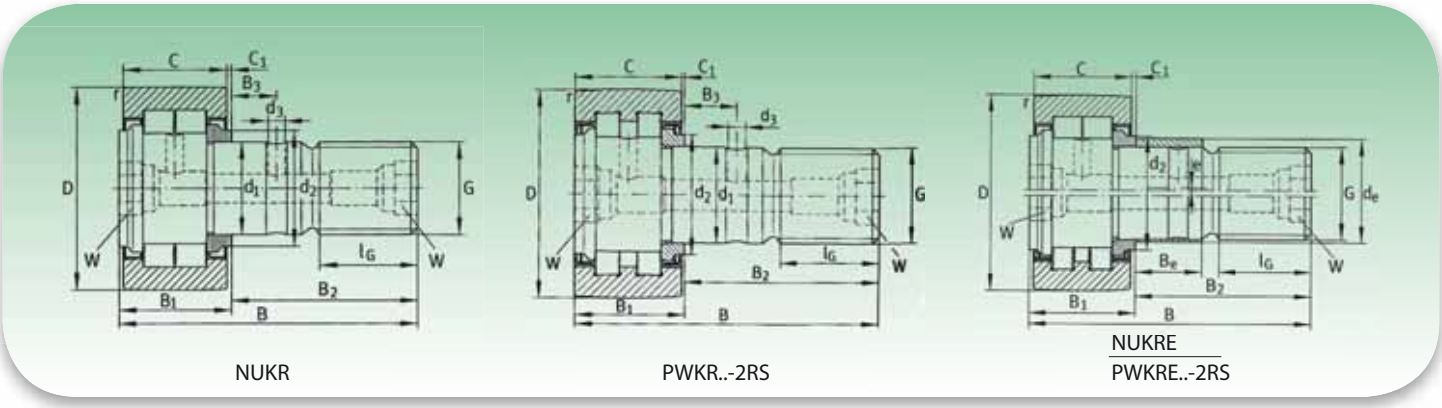

Dimensioni (mm) *Dimensions (mm)*					Nippli ingrassatori *Grease nipples*	Momento di serraggio *Nut tightening torque*	Coefficienti di carico [2] *Basic load rating* [2]				Carico limite di fatica *Fatigue load*	Velocità limite *Limiting speed*
l_G	W	Eccentrico - *Eccentric*				M_A	din.	stat.	din.	stat.	C_{uw}	Grasso - *Grease* [3]
		d_e h9	B_e	e		N_m	C_{rw} N	C_{0rw} N	$F_{r\,per}$ N	$F_{0r\,per}$ N	N	N° giri max - *N° max rpm*
17	8	-	-	-	NIPA2X7,5	58	15 000	16 800	8 600	16 800	2 220	6 500
17	8	20	12	1	NIPA2X7,5	58	15 000	16 800	8 600	16 800	2 220	6 500
17	8	-	-	-	NIPA2X7,5	58	11 600	11 300	9 400	11 300	1 780	6 000
17	8	20	12	1	NIPA2X7,5	58	11 600	11 300	9 400	11 300	1 780	6 000
19	8	-	-	-	NIPA2X7,5	87	18 400	22 600	13 100	22 600	2 900	5 500
19	8	22	14	1	NIPA2X7,5	87	18 400	22 600	13 100	22 600	2 900	5 500
19	8	-	-	-	NIPA2X7,5	87	13 200	13 800	13 800	13 800	2 200	5 000
19	8	22	14	1	NIPA2X7,5	87	13 200	13 800	13 800	13 800	2 200	5 000
21	10	24	18	1	NIPA2X7,5	120	28 000	35 000	16 400	33 000	4 400	4 200
21	10	24	18	1	NIPA2X7,5	120	23 200	25 500	18 300	25 500	3 600	3 800
21	10	24	18	1	NIPA2X7,5	120	29 000	37 500	17 300	34 500	4 700	4 200
21	10	24	18	1	NIPA2X7,5	120	24 200	28 000	19 300	28 000	3 900	3 800
25	14	28	22	1	NIPA3X9,5	220	40 000	50 000	23 500	46 500	6 300	2 600
25	14	28	22	1	NIPA3X9,5	220	35 000	39 500	25 500	39 500	5 400	2 200
25	14	28	22	1	NIPA3X9,5	220	44 500	60 000	32 000	60 000	7 600	2 600
25	14	28	22	1	NIPA3X9,5	220	38 500	46 500	46 500	46 500	6 300	2 200
32	14	35	29	1.5	NIPA3X9,5	450	69 000	98 000	47 500	96 000	12 100	1 800
32	14	35	29	1.5	NIPA3X9,5	450	56 000	70 000	53 000	70 000	9 100	1 800
32	14	35	29	1.5	NIPA3X9,5	450	79 000	117 000	77 000	117 000	14 400	1 800
32	14	35	29	1.5	NIPA3X9,5	450	63 000	82 000	82 000	82 000	10 700	1 800